UNIVERSITY OF CAMBRIDGE INTERNATIONAL EXAMINATIONS
General Certificate of Education
Advanced Subsidiary Level and Advanced Level

CANDIDATE NAME									
CENTRE NUMBER						CANDIDATE NUMBER				

4044868560

CHEMISTRY **9701/21**

Paper 2 Structured Questions AS Core **May/June 2011**

1 hour 15 minutes

Candidates answer on the Question Paper.

Additional Materials: Data Booklet

READ THESE INSTRUCTIONS FIRST

Write your name, Centre number and candidate number on all the work you hand in.
Write in dark blue or black pen.
You may use a pencil for any diagrams, graphs, or rough working.
Do not use staples, paper clips, highlighters, glue or correction fluid.
DO **NOT** WRITE ON ANY BARCODES.

Answer **all** questions.
You may lose marks if you do not show your working or if you do not use appropriate units.
A Data Booklet is provided.

The number of marks is given in brackets [ ] at the end of each question or part question.
At the end of the examination, fasten all your work securely together.

For Examiner's Use	
1	
2	
3	
4	
5	
Total	

This document consists of **11** printed pages and **1** blank page.

© UCLES 2011

Answer **all** the questions in the spaces provided.

For Examiner's Use

1 Some intercontinental jet airliners use kerosene as fuel. The formula of kerosene may be taken as $C_{14}H_{30}$.

(a) To which homologous series of compounds does kerosene belong?

.....

[1]

(b) When kerosene burns in an excess of air, carbon dioxide and water form.
Balance the following equation for the complete combustion of kerosene.

$$.....C_{14}H_{30}(l) + ...O_2(g) \rightarrow .....CO_2(g) + ...H_2O(g)$$

[1]

(c) In this section, give your answers to <u>one</u> decimal place.

The flight path from Beijing to Paris is approximately 8195 km.
A typical intercontinental jet airliner burns 10.8 kg of kerosene for each kilometre covered.

(i) Calculate the mass, in tonnes, of $C_{14}H_{30}$ burnt on a flight from Beijing to Paris.
[1 tonne = 1 000 kg]

(ii) Use your equation in **(b)** to calculate the mass, in tonnes, of CO_2 produced during this flight.

[4]

© UCLES 2011

Bicycles may be carried on commercial airliners. When carried on airliners, bicycles are placed in the luggage hold. This is a part of the aircraft which, in flight, will have different temperatures and air pressures from those at sea level.

For Examiner's Use

This question concerns the change in pressure in an inflated bicycle tyre from when it is at sea level to when it is in the hold of an airliner in flight.

(d) At sea level and a temperature of 20 °C an inflated bicycle tyre contains 710 cm^3 of air at an internal pressure of $6 \cdot 10^5$ Pa.

Use the general gas equation $PV = nRT$ to calculate the amount, in moles, of air in the tyre at sea level.

[2]

The same bicycle, with its tyres inflated at sea level as described in **(d)** above, is placed in the luggage hold of an airliner. At a height of 10 000 m, the temperature in the luggage hold is 5 °C and the air pressure is $2.8 \cdot 10^4$ Pa.

(e) Assuming the volume of the tyre does not change, use your answer to **(d)** to calculate the pressure inside the tyre at a height of 10 000 m.

[2]

[Total: 10]

2 Crude oil contains a mixture of hydrocarbons together with other organic compounds which may contain nitrogen, oxygen or sulfur in their molecules.

For Examiner's Use

At an oil refinery, after the fractional distillation of crude oil, a number of other processes may be used including 'cracking', 'isomerisation', and 'reforming'.

(a) (i) What is meant by the term '*cracking*' and why is it carried out?

.....

.....

.....

.....

(ii) Outline briefly how the cracking of hydrocarbons would be carried out.

.....

.....

(iii) Construct a balanced equation for the formation of heptane, C_7H_{16}, by cracking tetradecane, $C_{14}H_{30}$.

.....

[4]

One of the sulfur-containing compounds present in crude oil is ethanethiol, C_2H_5SH, the sulfur-containing equivalent of ethanol. Ethanethiol is toxic and is regarded as one of the smelliest compounds in existence.

(b) The boiling point of ethanol, C_2H_5OH, is higher than that of C_2H_5SH.
Suggest a reason for this difference.

.....

.....[1]

© UCLES 2011

When ethanethiol is burned in an excess of air, three oxides of different elements are formed.

For Examiner's Use

(c) (i) Construct a balanced equation for this reaction.

.....

(ii) **Two** of the oxides formed cause serious environmental damage.

For **each** of these oxides, identify the type of pollution caused and describe one consequence of this pollution.

.....

.....

.....

.....

.....

[6]

(d) A small amount of ethanethiol is added to liquefied gases such as butane that are widely used in portable cooking stoves.

Suggest a reason for this.

.....[1]

Sulfur-containing compounds are removed from oil products at the refinery. The sulfur is recovered and converted into SO_2, which is then used in the Contact process.

(e) State the main operating details of the formation of SO_3 in the Contact process.

.....

.....

.....

.....

.....[3]

[Total: 15]

3 Calcium is the fifth most common element in the Earth's crust.
Calcium compounds occur in bones and teeth and also in many minerals.

For Examiner's Use

Some reactions of calcium and its compounds are shown in the reaction scheme below.

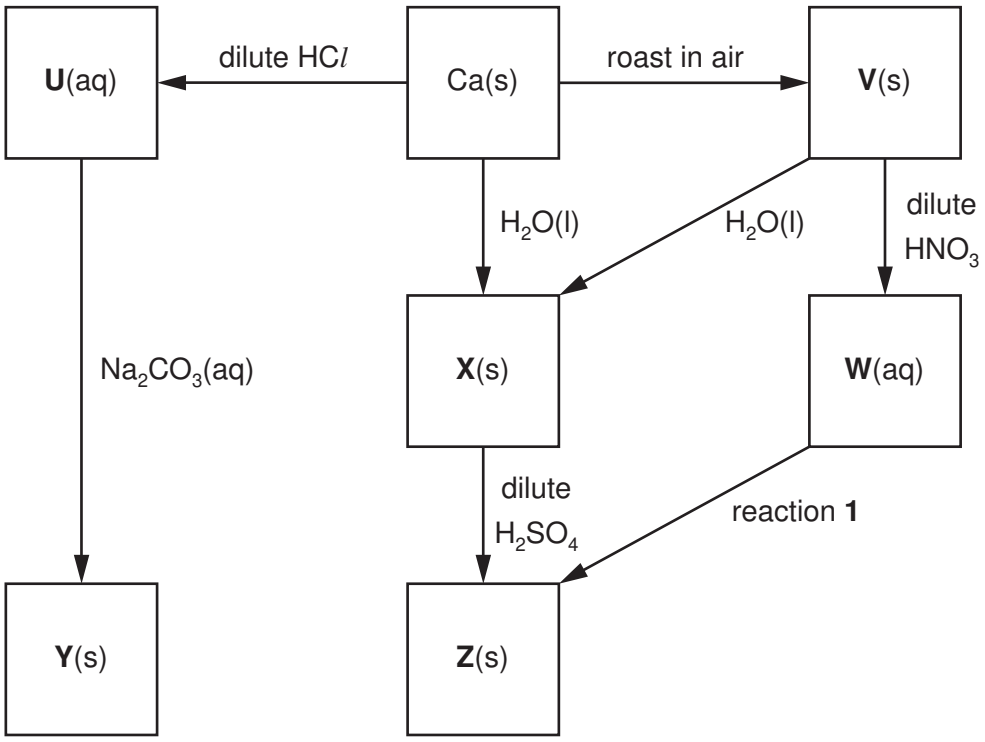

(a) State the formula of **each** of the calcium compounds **U** to **Y**.

U .....

V .....

W .....

X .....

Y ..... [5]

(b) Compound **Y** may be converted into compound **V**.
Outline how this reaction would be carried out in a school or college laboratory using a small sample of **Y**.

.....

.....[1]

© UCLES 2011

For Examiner's Use

(c) **(i)** Construct balanced equations for the following reactions.

calcium to compound **U**

.....

compound **V** to compound **W**

.....

compound **U** to compound **Y**

.....

(ii) Construct a balanced equation for the effect of heat on solid compound **W**.

.....

[4]

(d) Suggest the formula of an aqueous reagent, other than an acid, for reaction **1**.

..... [1]

(e) What would be observed when **each** of the following reactions is carried out in a test-tube?

the formation of **X** from Ca(s)

.....

the formation of **X** from **V**

.....

[2]

[Total: 13]

© UCLES 2011

[Turn over

For Examiner's Use

4 Ketones are widely used as solvents and as intermediates in the chemical industry.

Ketones contain the reactive keto group, 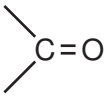.

(a) Propanone, CH_3COCH_3, undergoes a reaction with hydrogen cyanide, HCN.

(i) What type of reaction is this?

.....

(ii) What reagents are used?

.....

(iii) Draw a diagram to show the dipole present in the propanone molecule.

[3]

(b) Propanone reacts with 2,4-dinitrophenylhydrazine reagent.

For Examiner's Use

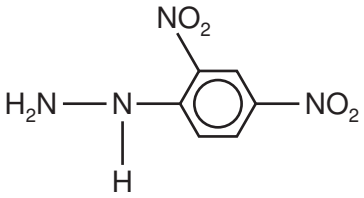

2,4-dinitrophenylhydrazine

(i) Construct a balanced equation for the reaction between propanone and 2,4-dinitrophenylhydrazine.

(ii) A similar type of reaction occurs between propanone and hydroxylamine, NH_2OH.

Draw the displayed formula of the organic product of this reaction.

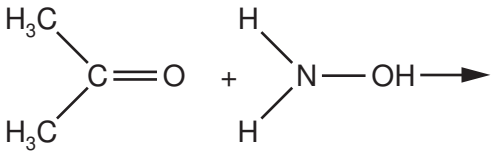

[3]

[Total: 6]

For Examiner's Use

5 The gas ethyne, C_2H_2, more commonly known as acetylene, is manufactured for use in the synthesis of organic compounds. It is also used, in combination with oxygen, in 'oxy-acetylene' torches for the cutting and welding of metals.

Industrially, ethyne is made from calcium carbide, CaC_2, or by cracking liquid hydrocarbons.

(a) When calcium carbide is reacted with water, ethyne and calcium hydroxide are formed.

Construct a balanced equation for this reaction.

.....[1]

Ethyne can also be obtained from ethene by using the following sequence of reactions.

$$CH_2CH_2 \xrightarrow{\text{step 1}} ClCH_2CH_2Cl \xrightarrow{\text{step 2}} HC{\equiv}CH$$

(b) (i) What types of reaction are step 1 and step 2?

step 1 .....

step 2 .....

(ii) Suggest what reagent and conditions would be used in a laboratory in step 2.

reagent .....

conditions ..... [5]

When ethyne is passed into water at 60 °C, in the presence of a little H_2SO_4 and Hg^{2+} ions, a pungent, colourless organic liquid, **Q**, with M_r of 44 is obtained. This is step 3.

When **Q** is warmed with Tollens' reagent in a test-tube, a silver mirror is formed.
On acidification, the solution remaining in the test-tube is found to contain the organic compound **R** which has M_r of 60. This is step 4.

(c) (i) Give the structural formulae of **Q** and **R**.

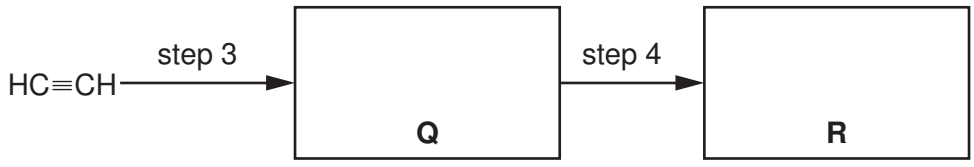

(ii) What type of reaction is step 3 and step 4?

step 3 .....

step 4 ..... [4]

(d) The standard enthalpy change of combustion of C_2H_2, $\Delta H_c^{\ominus}$, is $-1300\,kJ\,mol^{-1}$ at 298 K.

For Examiner's Use

Values of relevant standard enthalpy changes of formation, $\Delta H_f^{\ominus}$, measured at 298 K, are given in the table.

substance	$\Delta H_f^{\ominus}$ / kJ mol^{-1}
$CO_2(g)$	–394
$H_2O(l)$	–286

(i) Write balanced equations, with state symbols, that represent

the standard enthalpy change of combustion, $\Delta H_c^{\ominus}$, of C_2H_2, and

.....

the standard enthalpy change of formation, $\Delta H_f^{\ominus}$, of C_2H_2.

.....

(ii) Use the data above and your answer to **(i)** to calculate the standard enthalpy change of formation, $\Delta H_f^{\ominus}$, of C_2H_2.
Show clearly whether the standard enthalpy change of formation of C_2H_2 has a positive or negative value.

[6]

[Total: 16]

© UCLES 2011

BLANK PAGE

Permission to reproduce items where third-party owned material protected by copyright is included has been sought and cleared where possible. Every reasonable effort has been made by the publisher (UCLES) to trace copyright holders, but if any items requiring clearance have unwittingly been included, the publisher will be pleased to make amends at the earliest possible opportunity.

University of Cambridge International Examinations is part of the Cambridge Assessment Group. Cambridge Assessment is the brand name of University of Cambridge Local Examinations Syndicate (UCLES), which is itself a department of the University of Cambridge.

© UCLES 2011